Dell™ Latitude™ D520 Service Manual

Before You Begin
System Components
Media Bay
Hard Drive
Memory Module(s)
Modem
Mini-Card
Internal Card With Bluetooth ® Wireless Technology
Hinge Cover
Keyboard
Display Assembly
Palm Rest
Coin-Cell Battery
Speaker Assembly
Base Latch
Processor Thermal-Cooling Assembly
Processor Module
System Fan
System Board Assembly
Flashing the BIOS
Pin Assignments for I/O Connectors

Notes, Notices, and Cautions

NOTE: A NOTE indicates important information that helps you make better use of your computer.

NOTICE: A NOTICE indicates either potential damage to hardware or loss of data and tells you how to avoid the problem.

CAUTION: A CAUTION indicates a potential for property damage, personal injury, or death.

Abbreviations and Acronyms

For a complete list of abbreviations and acronyms, see "Glossary" in the *User's Guide*.

If you purchased a Dell™ n Series computer, any references in this document to Microsoft® Windows® operating systems are not applicable.

Information in this document is subject to change without notice.
© 2006 Dell Inc. All rights reserved.

Reproduction in any manner whatsoever without the written permission of Dell Inc. is strictly forbidden.

Trademarks used in this text: *Dell*, the *DELL* logo, and *Latitude* are trademarks of Dell Inc; *Bluetooth* is a registered trademark owned by Bluetooth SIG, Inc. and is used by Dell under license; *Microsoft* and *Windows* are registered trademarks of Microsoft Corporation.

Other trademarks and trade names may be used in this document to refer to either the entities claiming the marks and names or their products. Dell Inc. disclaims any proprietary interest in trademarks and trade names other than its own.

Model PP17L

March 2006 Rev. A00

Back to Contents Page

Before You Begin

Dell™ Latitude™ D520 Service Manual

- Recommended Tools
- Turning Off Your Computer
- Before Working Inside Your Computer
- Computer Orientation
- Screw Identification

This section provides procedures for removing and installing the components in your computer. Unless otherwise noted, each procedure assumes that the following conditions exist:

- You have performed the steps in Turning Off Your Computer and Before Working Inside Your Computer.
- You have read the safety information in the Dell™ *Product Information Guide.*
- A component can be replaced or—if purchased separately—installed by performing the removal procedure in reverse order.

Recommended Tools

The procedures in this document may require the following tools:

- Small flat-blade screwdriver
- Phillips screwdriver
- Small plastic scribe
- Flash BIOS update program CD

Turning Off Your Computer

NOTICE: To avoid losing data, save and close any open files and exit any open programs before you turn off your computer.

1. Shut down the operating system:

   Save and close any open files, exit any open programs, click **Start→ Shut Down→ Shut down**.

   The computer turns off after the operating system shutdown process finishes.

2. Ensure that the computer and any attached devices are turned off. If your computer and attached devices did not automatically turn off when you shut down your operating system, press and hold the power button for 4 seconds.

Before Working Inside Your Computer

Use the following safety guidelines to help protect your computer from potential damage and to help ensure your own personal safety.

CAUTION: Before you begin any of the procedures in this section, follow the safety instructions in the Product Information Guide.

NOTICE: Handle components and cards with care. Do not touch the components or contacts on a card. Hold a card by its edges or by its metal mounting bracket. Hold a component such as a processor by its edges, not by its pins.

NOTICE: Only a certified service technician should perform repairs on your computer. Damage due to servicing that is not authorized by Dell is not covered by your warranty.

NOTICE: When you disconnect a cable, pull on its connector or on its pull-tab, not on the cable itself. Some cables have a connector with locking tabs; if you are disconnecting this type of cable, press in on the locking tabs before you disconnect the cable. As you pull connectors apart, keep them evenly aligned to avoid bending any connector pins. Also, before you connect a cable, ensure that both connectors are correctly oriented and aligned.

NOTICE: To help prevent damage to the computer, perform the following steps before you begin working inside the computer.

1. Ensure that the work surface is flat and clean to prevent the computer cover from being scratched.

2. Turn off your computer (see Turning Off Your Computer).

NOTICE: To disconnect a network cable, first unplug the cable from your computer and then unplug it from the network device.

3. Disconnect any telephone or network cables from the computer.

4. Disconnect your computer and all attached devices from their electrical outlets.

5. Close the display and turn the computer upside-down on a flat work surface.

NOTICE: To help prevent damage to the system board, remove the main battery before working inside the computer.

6. Remove the main battery:
   a. Slide the battery-bay latch release on the bottom of the computer.
   b. Remove the battery from the battery bay.

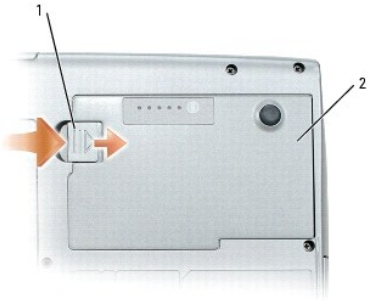

1	battery-bay latch release	2	main battery

7. Turn the computer top-side up.

Computer Orientation

1	front	2	left	3	back
4	right				

Screw Identification

When you are removing and replacing components, print the screw identification chart as a tool to lay out and keep track of the screws. The chart provides the number of screws and their sizes.

Media Bay Device: (1 each) M2 x 3 mm	Hard Drive: (2 each) M3 x 5 mm	Modem: (1 each) M2 x 3 mm
Keyboard: (2 each) M2.5 x 5 mm	Display Assembly: (4 each) M2.5 x 5 mm	Display Bezel: (6 each, under rubber display bumpers) M2 x 5 mm
Display Panel: (8 each) M2 x 5 mm	Display Latch: (1 each) M2 x 4 mm	Palm Rest: (14 each – bottom side) M2.5 x 8 mm
Palm Rest: (4 each - top side) M2.5 x 5 mm	Speakers: (1 each) M2.5 x 5 mm	Fan: (2 each) M2.5 x 5 mm
System Board: (2 each) M2.5 x 5 mm		

Back to Contents Page

Back to Contents Page

Internal Card With Bluetooth® Wireless Technology

Dell™ Latitude™ D520 Service Manual

- Removing the Card

Removing the Card

CAUTION: Before performing the following procedures, read the safety instructions in your Product Information Guide.

NOTICE: To avoid electrostatic discharge, ground yourself by using a wrist grounding strap or by periodically touching a connector on the back panel of the computer.

If you ordered an internal card with Bluetooth wireless technology with your computer, it is already installed.

1. Follow the procedures in Before You Begin.
2. Remove the hard drive (see Hard Drive).
3. Pull the card cable connector out of the system board connector.
4. Pull the cable to remove the card from the computer.

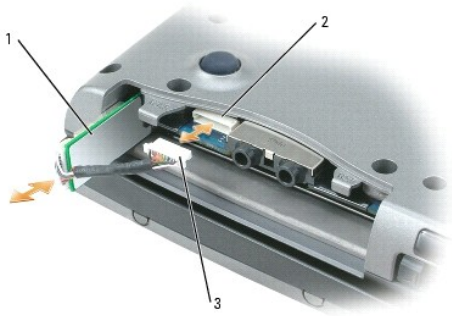

1	card	2	system board connector	3	cable connector

NOTICE: Be careful when removing the card to avoid damaging the card, card cable, or surrounding components.

Back to Contents Page

Back to Contents Page

Mini-Card

Dell™ Latitude™ D520 Service Manual

- Wireless Local Area Network (WLAN) Cards

CAUTION: Before you begin the following procedure, follow the safety instructions in the Product Information Guide.

NOTICE: To prevent damage to the system board, remove the main battery before you service the computer.

Wireless Local Area Network (WLAN) Cards

NOTE: If you ordered a WLAN card with your computer, the card is already installed.

1. Follow the procedures in Before You Begin.
2. Turn the computer upside-down, loosen the captive screw on the cover, and remove the cover from the computer.

3. Ground yourself by touching one of the metal connectors on the back of the computer.

   NOTE: If you leave the area, ground yourself again when you return to the computer.

4. If a card is not already installed, go to step 5. If you are replacing a card, remove the existing card:
   a. Disconnect the antenna cables from the card.

NOTE: Depending on the type of Mini-Card you have, either two or three of the three antenna cables may be in use. The white cable goes to the main antenna connector, the black goes to the aux connector, and the grey goes to the third connector (if applicable).

		1	antenna cables (2)		

   b. Release the card by pushing the metal securing tab away from the card until the card pops up slightly.

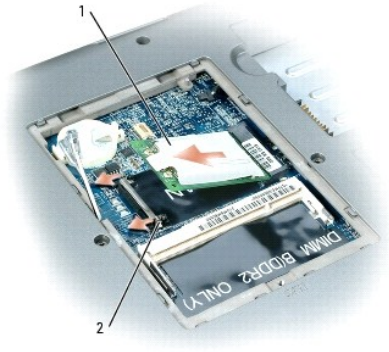

1	WLAN card	2	metal securing tabs (2)		

c. Slide the card at a 45-degree angle out of its connector.

NOTICE: The connectors are keyed to ensure correct insertion. If you feel resistance, check the connectors and realign the card.

NOTE: Do not insert a Mobile Broadband (WWAN) network card into the WLAN card connector.

NOTE: The WLAN card may have two or three antenna connectors, depending on the type of card you ordered.

5. Install the card:

NOTICE: To avoid damaging the WLAN card, never place cables on top of or under the card.

a. Move any antenna cables out of the way to make space for the WLAN card.

b. Align the card with the connector at a 45-degree angle, and press the card into the connector until it clicks.

NOTE: For more specific information about which cable to connect to which connector, see the documentation that came with your WLAN card.

c. Connect the antenna cables to the WLAN card, ensuring that you route the cables correctly.

Back to Contents Page

Back to Contents Page

Coin-Cell Battery

Dell™ Latitude™ D520 Service Manual

CAUTION: Before performing the following procedures, follow the safety instructions in your Product Information Guide.

NOTICE: To avoid electrostatic discharge, ground yourself by using a wrist grounding strap or by periodically touching a connector on the back panel of the computer.

NOTICE: To prevent damage to the system board, remove the main battery before you service the computer.

1. Follow the procedures in Before You Begin.

2. Turn the computer upside-down, loosen the captive screw on the cover, and then remove the cover.

3. Use a plastic scribe to slide into the guide on the side of the coin-cell battery compartment, and lift the battery out.

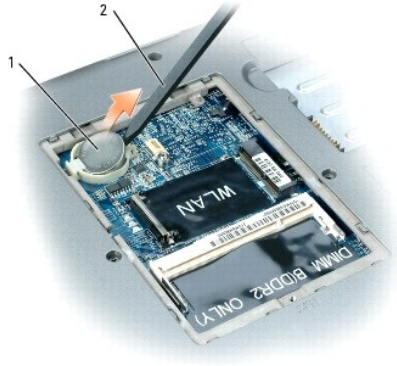

1	coin-cell battery	2	plastic scribe		

When you replace the battery, insert it at a 30-degree angle under the clip with the positive (identified by a plus [+] symbol) side up, and then push it into place.

Back to Contents Page

Back to Contents Page

System Components

Dell™ Latitude™ D520 Service Manual

NOTICE: Only a certified service technician should perform repairs on your computer. Damage due to servicing that is not authorized by Dell is not covered by your warranty.

NOTICE: Unless otherwise noted, each procedure in this document assumes that a part can be replaced by performing the removal procedure in reverse order.

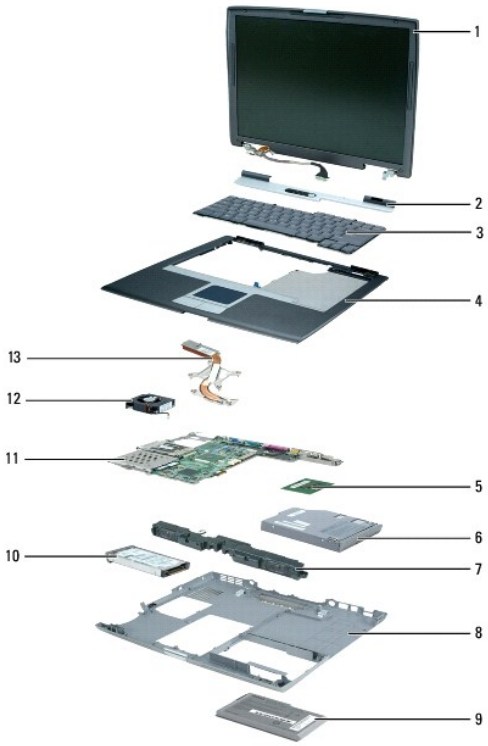

1	display assembly	2	hinge cover	3	keyboard
4	palm rest (with touch pad)	5	processor	6	optical drive
7	speaker assembly	8	computer base	9	main battery
10	hard drive	11	system board assembly	12	fan
13	processor thermal-cooling assembly	14		15	

Back to Contents Page

Back to Contents Page

Processor Module

Dell™ Latitude™ D520 Service Manual

- Removing the Processor Module
- Replacing the Processor Module

Removing the Processor Module

CAUTION: Before you begin the following procedure, follow the safety instructions in the Product Information Guide.

NOTICE: To avoid electrostatic discharge, ground yourself by using a wrist grounding strap or by periodically touching an unpainted metal surface (such as the back panel) on the computer.

NOTICE: Do not touch the processor die. Press and hold the processor down on the substrate on which the die is mounted while turning the cam screw to prevent intermittent contact between the cam screw and processor.

NOTICE: To avoid damage to the processor, hold the screwdriver so that it is perpendicular to the processor when turning the cam screw.

NOTICE: To help prevent damage to the system board, remove the main battery (see Before Working Inside Your Computer) before working inside the computer.

1. Follow the instructions in Before You Begin.
2. Remove the hinge cover (see Hinge Cover).
3. Remove the keyboard (see Keyboard).

NOTICE: To ensure maximum cooling for the processor, do not touch the heat transfer areas on the processor thermal-cooling assembly. The oils in your skin reduce the heat transfer capability of the thermal pads.

4. Remove the processor thermal-cooling assembly (see Removing the Processor Thermal-Cooling Assembly).

NOTICE: When removing the processor module, pull the module straight up. Be careful not to bend the pins on the processor module.

5. To loosen the ZIF socket, use a small, flat-blade screwdriver and rotate the ZIF-socket cam screw counterclockwise until it comes to the cam stop.

1	pin-1 corner of microprocessor	2	processor module	3	ZIF-socket cam screw

NOTE: The ZIF-socket cam screw secures the processor to the system board. Take note of the arrow on the ZIF- socket cam screw, which indicates the direction to turn the cam screw.

6. Lift the processor module from the ZIF socket.

Replacing the Processor Module

NOTICE: Ensure that the cam lock is in the fully open position before seating the processor module. Seating the processor module properly in the ZIF socket does not require force.

NOTICE: A processor module that is not properly seated can result in an intermittent connection or permanent damage to the processor and ZIF socket.

NOTE: If a new microprocessor is installed, you will receive one of the following: a new thermal-cooling assembly which will include an affixed thermal pad; or, you will receive a new thermal pad along with a tech sheet to illustrate proper installation.

1. Align the pin-1 corner of the processor module with the pin-1 corner of the ZIF socket, and insert the processor module.

NOTE: The pin-1 corner of the processor module has a triangle that aligns with the triangle on the pin-1 corner of the ZIF socket.

NOTICE: You must position the processor module correctly in the ZIF socket to avoid permanent damage to the module and the socket.

When the processor module is correctly seated, all four corners are aligned at the same height. If one or more corners of the module are higher than the others, the module is not seated correctly.

2. Tighten the ZIF socket by turning the cam screw clockwise to secure the processor module to the system board.

3. Perform the steps in Removing the Processor Module in reverse order, beginning with step 4.

Back to Contents Page

Back to Contents Page

Processor Thermal-Cooling Assembly

Dell™ Latitude™ D520 Service Manual

- Removing the Processor Thermal-Cooling Assembly
- Replacing the Processor Thermal-Cooling Assembly

Removing the Processor Thermal-Cooling Assembly

CAUTION: Before you begin the following procedure, follow the safety instructions in the Product Information Guide.

NOTICE: To avoid electrostatic discharge, ground yourself by using a wrist grounding strap or by periodically touching an unpainted metal surface (such as the back panel) on the computer.

NOTICE: To help prevent damage to the system board, remove the main battery (see Before Working Inside Your Computer) before working inside the computer.

1. Follow the instructions in Before You Begin.
2. Remove the hinge cover (see Hinge Cover).
3. Remove the keyboard (see Keyboard).
4. Remove the captive screw that attaches the display cable to the system board.
5. Disconnect the display cable from the display cable connector on the system board.
6. Release the three antenna cables from the three antenna-securing clips.
7. Disconnect the three Mini-Card antenna cables (see Mini-Card).

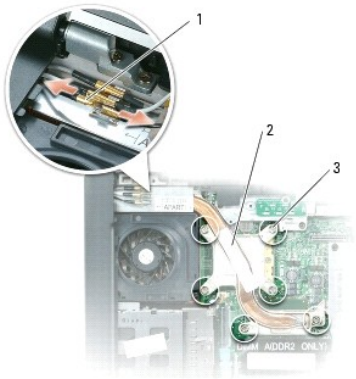

1	antenna cable connectors (3)	2	processor thermal-cooling assembly	3	captive screws (6)

8. In consecutive order, loosen the six captive screws labeled "1" through "6," that secure the processor thermal-cooling assembly to the system board and remove the processor thermal-cooling assembly away from the computer.

Replacing the Processor Thermal-Cooling Assembly

CAUTION: Before you begin the following procedure, follow the safety instructions in the Product Information Guide.

NOTICE: To avoid electrostatic discharge, ground yourself by using a wrist grounding strap or by periodically touching an unpainted metal surface (such as the back panel) on the computer.

NOTICE: To help prevent damage to the system board, remove the main battery (see Before Working Inside Your Computer) before working inside the computer.

1. Place the processor thermal-cooling assembly over the processor.

2. Tighten the six captive screws, labeled "1" through "6," in consecutive order.

Back to Contents Page

Back to Contents Page

Display Assembly

Dell™ Latitude™ D520 Service Manual

- Removing the Display Assembly
- Display Bezel
- Display Panel
- Display Latch

Removing the Display Assembly

CAUTION: Before you begin the following procedure, follow the safety instructions in the Product Information Guide.

NOTICE: To avoid electrostatic discharge, ground yourself by using a wrist grounding strap or by periodically touching an unpainted metal surface (such as the back panel) on the computer.

NOTICE: To help prevent damage to the system board, remove the main battery (see Before Working Inside Your Computer) before working inside the computer.

1. Follow the instructions in Before Working Inside Your Computer.
2. Remove the hinge cover (see Hinge Cover).
3. Remove the keyboard (see Keyboard).
4. Remove the captive screw that grounds the display cable.
5. Disconnect the display cable from the display cable connector on the system board.
6. Disconnect the three Mini-Card antenna cables (see Mini-Card).
7. Disconnect the antenna cables from the display by holding the two gold antenna connectors on each connector and gently pulling them apart.

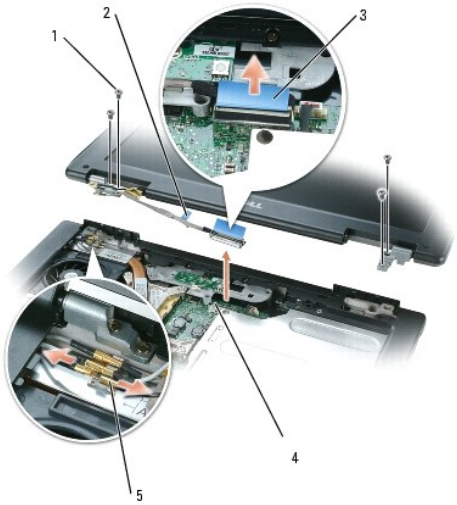

1	M2.5 x 5-mm screws (4)	2	display cable grounding-wire screw	3	display cable pull-tab
4	display connector on system board	5	antenna cable connectors (3)		

8. Remove the four M2.5 x 5-mm screws from the display and remove the display from the computer.

Replacing the Display Assembly

NOTICE: Ensure the antenna cables are not twisted and that they are lying flat in the antenna cable clip.

1. Replace the four M2.5 x 5-mm screws that secure the display to the computer base.
2. Connect the display cable to the system board.
3. Connect the three antenna cables.
4. Replace the keyboard.
5. Replace the hinge cover.

Display Bezel

Removing the Display Bezel

CAUTION: Before you begin the following procedure, follow the safety instructions in the Product Information Guide.

NOTICE: To avoid electrostatic discharge, ground yourself by using a wrist grounding strap or by periodically touching an unpainted metal surface (such as the back panel) on the computer.

NOTICE: To help prevent damage to the system board, you must remove the main battery (see Before Working Inside Your Computer) before you begin working inside the computer.

1. Follow the instructions in Before Working Inside Your Computer.
2. Remove the display assembly (see Removing the Display Assembly).
3. Remove the five rubber display bumpers.
4. Remove the six M2 x 5-mm screws around the display bezel.

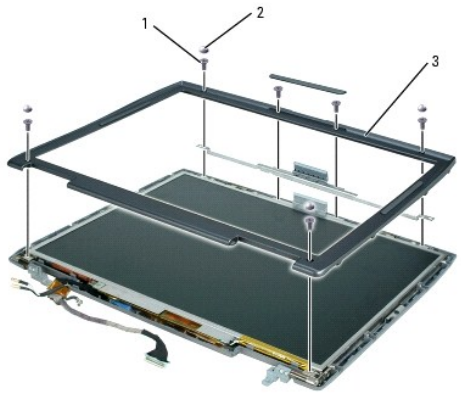

1	M2 x 5-mm screws(6)	2	rubber display bumpers (5)	3	display bezel

NOTICE: Removal of the bezel from the display back cover requires extreme care to avoid damage to the bezel.

5. Starting at the edges of the bottom of the display panel, use your fingers to separate the bezel from the top cover by lifting the inside edge of the bezel away from the top cover.

Replacing the Display Bezel

1. Starting at any corner, use your fingers to gently snap the bezel into place to secure it to the display panel.
2. Replace the six M2 x 5-mm screws around the display bezel.

3. Replace the five rubber display bumpers around the display bezel.

Display Panel

Removing the Display Panel

CAUTION: Before you begin the following procedure, follow the safety instructions in the Product Information Guide.

NOTICE: To avoid electrostatic discharge, ground yourself by using a wrist grounding strap or by touching an unpainted metal surface on the computer.

NOTICE: To help prevent damage to the system board, you must remove the main battery (see Before Working Inside Your Computer) before you begin working inside the computer.

1. Follow the instructions in Before Working Inside Your Computer.
2. Remove the display assembly (see Removing the Display Assembly).
3. Remove the display bezel (see Removing the Display Bezel).
4. Remove the eight M2 x 5-mm screws in sequential order (four on each side of the display panel).
5. Lift the display panel out of the display back cover.

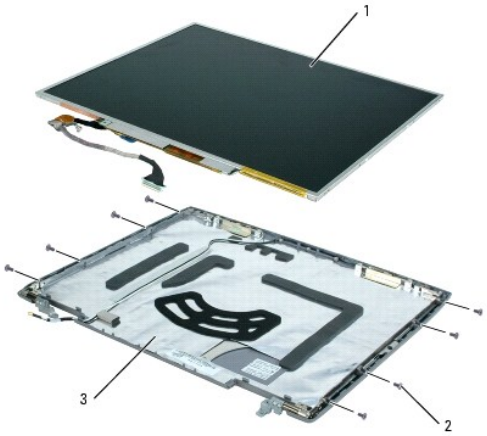

1	display panel	2	M2 x 5-mm screws (8)	3	display back cover

6. Use the pull-tab to disconnect the bottom flex-cable connector from the inverter connector.

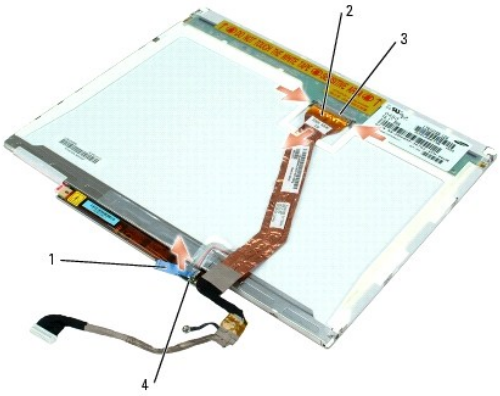

1	pull-tab on bottom flex-cable connector	2	top flex-cable connector	3	display cable connector

4	inverter connector				

Replacing the Display Panel

1. Reconnect the top display-cable connector to the top flex-cable connector.
2. Reconnect the bottom flex-cable connector to the inverter connector.
3. Replace the display panel inside the display back cover.

NOTE: The eight screw locations are numbered. Replace the screws in sequential order.

4. Replace the eight M2 x 5-mm screws (four on each side) in sequential order around the display panel.
5. Replace the display bezel.

Display Latch

Removing the Display Latch

CAUTION: Before you begin the following procedure, follow the safety instructions in the Product Information Guide.

NOTICE: To avoid electrostatic discharge, ground yourself by using a wrist grounding strap or by touching an unpainted metal surface on the computer.

NOTICE: To help prevent damage to the system board, you must remove the main battery (see Before Working Inside Your Computer) before you begin working inside the computer.

1. Follow the instructions in Before Working Inside Your Computer.
2. Remove the display assembly (see Removing the Display Assembly).
3. Remove the display bezel (see Removing the Display Bezel).
4. Remove the display panel (see Display Panel).

NOTICE: A strip of copper foil may be present beneath the support bracket on some systems; ensure that you do not tear this foil while removing the bracket.

5. Remove the M2 x 4-mm screw that secures the display support bracket to the top cover.
6. Lift the display support bracket out of the top cover, and then remove the display latch.

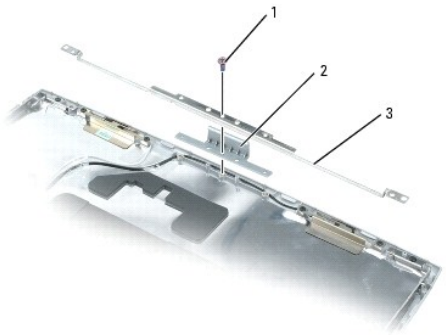

1	M2 x 4-mm screw	2	display latch	3	display support bracket

Replacing the Display Latch

1. Align the latch with the posts on the display back and set into place.
2. Replace the support bracket and replace the M2 x 4-mm screw.

Back to Contents Page

Back to Contents Page

System Fan

Dell™ Latitude™ D520 Service Manual

CAUTION: Before you begin the following procedure, follow the safety instructions in the Product Information Guide.

NOTICE: To avoid electrostatic discharge, ground yourself by using a wrist grounding strap or by periodically touching an unpainted metal surface (such as the back panel) on the computer.

NOTICE: To help prevent damage to the system board, remove the main battery (see Before Working Inside Your Computer) before working inside the computer.

1. Follow the instructions in Before You Begin.
2. Remove the palm rest (see Removing the Palm Rest).
3. Remove the two M2.5 x 5-mm screws from the fan, and then remove the connector that connects the fan to the system board.

1	M2.5 x 5-mm screws (2)	2	fan	3	fan connector
4	system board connector				

Back to Contents Page

Back to Contents Page

Flashing the BIOS

Dell™ Latitude™ D520 Service Manual

NOTICE: Plug the AC adapter into a known good power source to prevent a loss of power. Failure to do so may cause system damage.

1. Ensure that the AC adapter is plugged in and that the main battery is installed properly.

NOTE: If you use a BIOS update program CD to flash the BIOS, press <F12> before inserting the CD so that you can set up the computer to boot from a CD this one time only. Otherwise, you must enter the system setup program to change the default boot order.

2. Insert the BIOS update program CD, and turn on the computer.

NOTICE: Do not interrupt this process once it begins. Doing so may cause system damage.

Follow the instructions that appear on the screen. The computer continues to boot and updates the new BIOS. When the flash update is complete, the computer will automatically reboot.

3. Press <F2> during POST to enter the system setup program.
4. Press <Alt> and <f> to reset the computer defaults.
5. Press <Esc>, select **Save / Exit**, and press <Enter> to save configuration changes.
6. Remove the flash BIOS update program CD from the drive and restart the computer.

Back to Contents Page

Back to Contents Page

Hard Drive

Dell™ Latitude™ D520 Service Manual

- Removing the Hard Drive
- Replacing the Hard Drive
- Returning a Hard Drive to Dell

Removing the Hard Drive

CAUTION: If you remove the hard drive from the computer when the drive is hot, do not touch the metal housing of the hard drive.

CAUTION: Before you begin the following procedure, follow the safety instructions in the Product Information Guide.

NOTICE: To prevent data loss, turn off your computer before removing the hard drive. Do not remove the hard drive while the computer is on, in standby mode, or in hibernate mode.

NOTICE: Hard drives are extremely fragile; even a slight bump can damage the drive.

NOTE: Dell does not guarantee compatibility or provide support for hard drives from sources other than Dell.

1. Follow the instructions in Before Working Inside Your Computer.
2. Turn the computer upside-down and remove the two M3 x 5-mm screws.

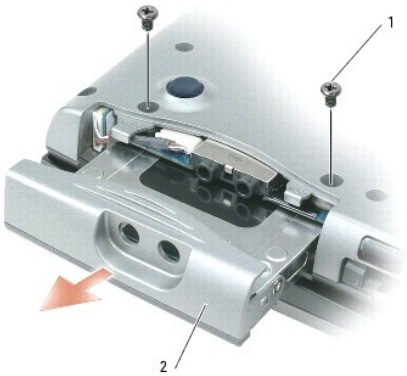

1	M3 x 5-mm screws (2)	2	hard drive		

NOTICE: When the hard drive is not in the computer, store it in protective antistatic packaging. See "Protecting Against Electrostatic Discharge" in your Product Information Guide.

3. Slide the hard drive out of the computer.

Replacing the Hard Drive

NOTICE: Use firm and even pressure to slide the drive into place. If you use excessive force, you may damage the connector.

1. Slide the drive into the bay until it is fully seated.
2. Replace and tighten the screws.
3. If you have installed a replacement hard drive, reinstall the Microsoft® Windows® operating system. For instructions, see "Restoring Your Operating System" in the *User's Guide*.
4. Reinstall drivers on the new hard drive. For instructions, see "Reinstalling Drivers and Utilities" in the *User's Guide*.

Returning a Hard Drive to Dell

Return your old hard drive to Dell in its original or comparable foam packaging. Otherwise, the hard drive may be damaged in transit.

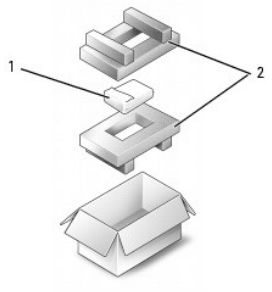

1	hard drive	2	foam packaging

Back to Contents Page

Back to Contents Page

Hinge Cover

Dell™ Latitude™ D520 Service Manual

CAUTION: Before you begin the following procedure, follow the safety instructions in the Product Information Guide.

NOTICE: To avoid electrostatic discharge, ground yourself by using a wrist grounding strap or by periodically touching an unpainted metal surface (such as the back panel) on the computer.

NOTICE: The hinge cover is fragile and can be damaged if extreme force is used. Be careful when removing the hinge cover.

1. Follow the instructions in Before Working Inside Your Computer.
2. Open the display all the way (180 degrees) so that it lies flat against your work surface.
3. Using a small flat-blade screwdriver, insert the screwdriver on the right side to gently pry the hinge cover loose.
4. Pulling up from right to left, remove the hinge cover.

1	hinge cover

With the display open all the way (180 degrees) so that it lies flat against the work surface, snap the cover back into place, starting from left to right.

Back to Contents Page

Back to Contents Page

Keyboard

Dell™ Latitude™ D520 Service Manual

- Removing the Keyboard
- Replacing the Keyboard

CAUTION: Before you begin any of the procedures in this section, follow the safety instructions in the Product Information Guide.

NOTICE: To avoid electrostatic discharge, ground yourself by using a wrist grounding strap or by periodically touching an unpainted metal surface (such as a connector on the back of the computer).

Removing the Keyboard

1. Follow the procedures in Before You Begin.
2. Remove the hinge cover (see Hinge Cover).
3. Remove the two M2.5 x 5-mm screws at the top of the keyboard.

NOTICE: The keycaps on the keyboard are fragile, easily dislodged, and time-consuming to replace. Be careful when removing and handling the keyboard.

4. Lift the keyboard only enough to hold it up and slide the keyboard forward to allow access to the keyboard connector on the system board.
5. To release the keyboard cable from the connector on the system board, rotate the plastic bar on the keyboard connector to the left side of the computer.

1	keyboard	2	M2.5 x 5-mm screws (2)	3	tabs (5)
4	keyboard cable	5	plastic bar on keyboard connector		

Replacing the Keyboard

NOTICE: To avoid scratching the palm rest when replacing the keyboard, hook the tabs along the front edge of the keyboard into the palm rest, and then secure the keyboard in place.

1. To replace the keyboard, connect the keyboard cable to the connector on the system board.
2. Place the tabs along the front edge of the keyboard into the palm rest, and lay the keyboard down on the palm rest.
3. Replace the two M2.5 x 5-mm screws at the top of the keyboard.
4. Replace the hinge cover.

Back to Contents Page

Base Latch

Dell™ Latitude™ D520 Service Manual

CAUTION: Before you begin the following procedure, follow the safety instructions in the Product Information Guide.

NOTICE: To avoid electrostatic discharge, ground yourself by using a wrist grounding strap or by periodically touching an unpainted metal surface (such as the back panel) on the computer.

NOTICE: To help prevent damage to the system board, remove the main battery (see Before Working Inside Your Computer) before working inside the computer.

1. Follow the instructions in Before You Begin.
2. Remove the palm rest (see Removing the Palm Rest).
3. Press in the release button, press together the two securing clips, then pull the base latch up and away from the computer base.

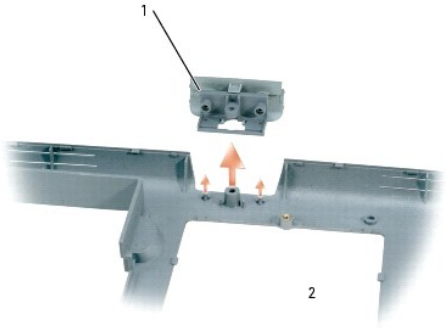

1	base latch	2	securing clips (2)

Back to Contents Page

Back to Contents Page

Media Bay

Dell™ Latitude™ D520 Service Manual

NOTE: If the device security screw is not present, you can remove and install devices while the computer is running and connected to a docking device (docked).

1. Save and close any open files, exit any open programs, and shut down the computer.
2. If the computer is connected to a docking device (docked), undock it. See the documentation that came with your docking device for instructions.
3. Close the display and turn the computer upside-down.
4. If present, remove the M2 x 3-mm device security screw from the bottom of the computer.

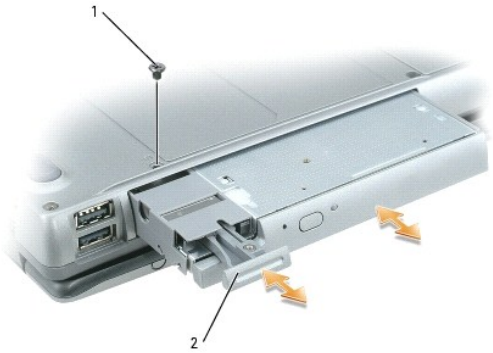

1	M2 x 3-mm security screw	2	device latch release		

5. Press in the device latch release, and pull the drive out of the media bay.

To replace the drive into the media bay, push the new device into the bay until it clicks, then replace the M2 x 3-mm security screw (if present).

Back to Contents Page

Back to Contents Page

Memory Module(s)

Dell™ Latitude™ D520 Service Manual

- Memory
- DIMM A
- DIMM B

Memory

You can increase your computer memory by installing memory modules on the system board. See the "Specifications" section in your *User's Guide* for information on the memory supported by your computer. Install only memory modules that are intended for your computer.

NOTE: Memory modules purchased from Dell are covered under your computer warranty.

CAUTION: Before you begin any of the procedures in this section, follow the safety instructions in the Product Information Guide.

NOTICE: To prevent damage to the system board, remove the main battery before you service the computer.

The computer has two memory module connectors labeled "DIMM A" and "DIMM B." DIMM A is located on top of the system board (under the keyboard), and DIMM B is located on the bottom of the system board under the memory module cover. If only one memory module is installed, it must be installed in DIMM A, as configured from the factory. If you did not order additional memory, DIMM B is empty. Generally, if you add memory, you add by installing a memory module in DIMM B. If you are upgrading memory, you may need to remove and install memory modules in both DIMM A and DIMM B, depending on the extent of the upgrade.

DIMM A

1. Follow the procedures in Before You Begin.
2. Remove the hinge cover (see Hinge Cover).
3. Remove the keyboard (see Keyboard).
4. Ground yourself by touching one of the metal connectors on the back of the computer.

NOTICE: If you leave the area, ground yourself again when you return to the computer.

5. If you are replacing a memory module, remove the existing module:

NOTICE: To prevent damage to the memory module connector, do not use tools to spread the memory- module securing clips.

   a. Use your fingertips to carefully spread apart the securing clips on each end of the memory module connector until the module pops up.
   b. Remove the module from the connector.

1	memory module	2	securing clips (2)		

NOTICE: Insert memory modules at a 45-degree angle to prevent damage to the connector.

NOTE: If the memory module is not installed properly, the computer may not boot properly. No error message indicates this failure.

6. Ground yourself and install the new memory module:
   a. Align the notch in the module edge connector with the tab in the connector slot.
   b. Slide the module firmly into the slot at a 45-degree angle, and rotate the module down until it clicks into place. If you do not feel the click, remove the module and reinstall it.
7. Replace the keyboard (see Keyboard).
8. Replace the hinge cover (see Hinge Cover).
9. Insert the battery into the battery bay, or connect the AC adapter to your computer and an electrical outlet.
10. Turn on the computer.

As the computer boots, it detects the additional memory and automatically updates the system configuration information.

To confirm the amount of memory installed in the computer, click **Start**, click **Help and Support**, and then click **Dell System Information**.

DIMM B

1. Follow the procedures in Before You Begin.
2. Turn the computer upside-down, loosen the captive screw on the cover, and then remove the cover.

NOTICE: To prevent damage to the memory module connector, do not use tools to spread the memory-module securing clips.

3. If you are replacing a memory module, remove the existing module:
   a. Use your fingertips to carefully spread apart the securing clips on each end of the memory module connector until the module pops up.
   b. Remove the module from the connector.

1	securing clips (2)	2	memory module		

NOTICE: If you need to install memory modules in two connectors, install a memory module in the connector labeled "DIMMA" before you install a module in the connector labeled "DIMMB." Insert memory modules at a 45-degree angle to prevent damage to the connector.

NOTE: If the memory module is not installed properly, the computer may not boot properly. No error message indicates this failure.

4. Ground yourself and install the new memory module:
   a. Align the notch in the module edge connector with the tab in the connector slot.
   b. Slide the module firmly into the slot at a 45-degree angle, and rotate the module down until it clicks into place. If you do not feel the click, remove the module and reinstall it.
5. Replace the memory module cover and tighten the screw.

NOTICE: If the cover is difficult to close, remove the module and reinstall it. Forcing the cover to close may damage your computer.

6. Insert the battery into the battery bay, or connect the AC adapter to your computer and an electrical outlet.
7. Turn on the computer.

As the computer boots, it detects the additional memory and automatically updates the system configuration information.

To confirm the amount of memory installed in the computer, click **Start**, click **Help and Support**, and then click **Dell System Information**.

Back to Contents Page

Back to Contents Page

Modem

Dell™ Latitude™ D520 Service Manual

- Removing the Modem
- Replacing the Modem

Removing the Modem

CAUTION: Before you begin the following procedure, follow the safety instructions in the Product Information Guide.

NOTICE: To avoid electrostatic discharge, ground yourself by using a wrist grounding strap or by periodically touching an unpainted metal surface (such as the back panel) on the computer.

NOTICE: To help prevent damage to the system board, you must remove the main battery (see Before Working Inside Your Computer) before you begin working inside the computer.

1. Follow the instructions in Before Working Inside Your Computer.

2. Turn the computer upside-down, loosen the captive screw on the cover, and remove the cover from the computer.

3. Remove the M2 x 3-mm screw that attaches the modem to the system board.

4. Pull up on the pull-tab to disconnect the modem from the modem connector on the system board.

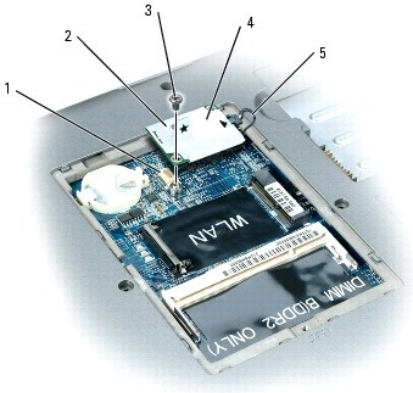

1	modem connector on system board	2	pull-tab	3	M2 x 3-mm screw
4	modem	5	modem cable		

NOTICE: Do not disconnect the modem cable from the system board.

5. Disconnect the modem cable from the modem.

Replacing the Modem

1. Connect the modem cable to the modem.

NOTICE: Ensure that the modem cable is routed correctly when you replace the modem.

2. Connect the modem to the system board.

   Align the connector on the bottom of the modem with the modem connector on the system board, and press down on the right side of the modem.

3. Replace the M2 x 3-mm screw.

Back to Contents Page

Back to Contents Page

Palm Rest

Dell™ Latitude™ D520 Service Manual

- Removing the Palm Rest
- Replacing the Palm Rest

Removing the Palm Rest

CAUTION: Before you begin the following procedure, follow the safety instructions in the Product Information Guide.

NOTICE: To avoid electrostatic discharge, ground yourself by using a wrist grounding strap or by periodically touching an unpainted metal surface (such as the back panel) on the computer.

NOTICE: To help prevent damage to the system board, remove the main battery (see Before Working Inside Your Computer) before working inside the computer.

1. Follow the instructions in Before Working Inside Your Computer.
2. Remove the media bay device (see Media Bay).
3. Remove the hard drive (see Removing the Hard Drive).
4. Remove the hinge cover (see Hinge Cover).
5. Remove the keyboard (see Removing the Keyboard).
6. Remove the display assembly (see Removing the Display Assembly).
7. Turn the computer upside down and remove the 14 M2.5 x 8-mm screws from the bottom of the computer.

NOTE: The screw locations may vary slightly from the image shown below.

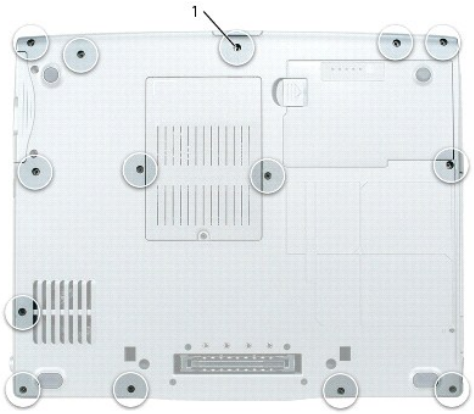

		1	M2.5 x 8-mm screws (14)		

8. Turn the computer top-side up and remove the four M2.5 x 5-mm screws labeled "P" from the top of the palm rest.

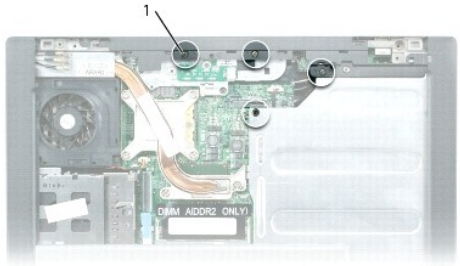

		1	M2.5 x 5-mm screws (4)		

9. Use the touch pad connector tab to disconnect the touch pad connector from the system board.

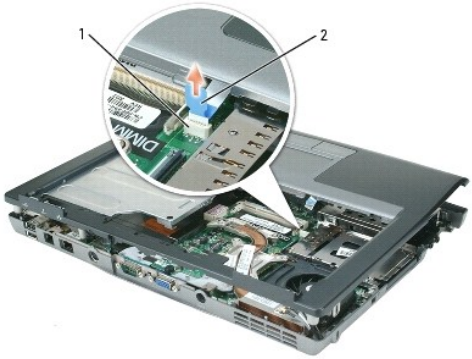

1	touch pad connector	2	tab		

10. Starting at the back center of the palm rest, use your fingers to separate the palm rest from the computer base by gently lifting up the palm rest while pressing down on the back of the computer base.

Replacing the Palm Rest

CAUTION: Before you begin the following procedure, follow the safety instructions in the Product Information Guide.

NOTICE: To avoid electrostatic discharge, ground yourself by using a wrist grounding strap or by periodically touching an unpainted metal surface (such as the back panel) on the computer.

NOTICE: To help prevent damage to the system board, remove the main battery (see Before Working Inside Your Computer) before working inside the computer.

1. Align the palm rest with the bottom plastics and gently snap it into place.
2. Reconnect the touch-pad connector to the system board.
3. Replace the four M2.5 x 5-mm screws on the top of the palm rest.
4. Turn the computer upside-down, and replace the 14 M2.5 x 8-mm screws on the bottom of the computer.

Back to Contents Page

Back to Contents Page

Pin Assignments for I/O Connectors

Dell™ Latitude™ D520 Service Manual

- USB Connector
- Video Connector
- S-Video TV-Out Connector
- IEEE 1394 Connector

USB Connector

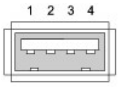

Pin	Signal
1	USB5V+
2	USBP–
3	USBP+
4	GND

Video Connector

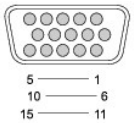

Pin	Signal	Pin	Signal
1	CRT_R	9	5V+
2	CRT_G	10	GND
3	CRT_B	11	MONITOR_DETECT–
4	NC	12	DDC_DATA
5	GND	13	CRT_HS
6	GND	14	CRT_VS
7	GND	15	DDC_CLK
8	GND		

S-Video TV-Out Connector

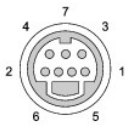

S-Video	
Pin	**Signal**
1	GND

2	GND
3	DLUMA-L
4	DCRMA-L

Composite Video	
Pin	**Signal**
5	NC
6	DCMPS-L
7	GND

IEEE 1394 Connector

Pin	Signal
1	TPB−
2	TPB+
3	TPA−
4	TPA+

Back to Contents Page

Back to Contents Page

Speaker Assembly

Dell™ Latitude™ D520 Service Manual

- Removing the Speaker Assembly
- Replacing the Speaker Assembly

Removing the Speaker Assembly

CAUTION: Before you begin the following procedure, follow the safety instructions in the Product Information Guide.

NOTICE: To avoid electrostatic discharge, ground yourself by using a wrist grounding strap or by periodically touching an unpainted metal surface (such as the back panel) on the computer.

NOTICE: To help prevent damage to the system board, remove the main battery (see Before Working Inside Your Computer) before working inside the computer.

1. Follow the instructions in Before You Begin.
2. Remove the media bay device (see Media Bay).
3. Remove the hard drive (see Removing the Hard Drive).
4. Remove the hinge cover (see Hinge Cover).
5. Remove the keyboard (see Removing the Keyboard).
6. Remove the display assembly (see Removing the Display Assembly).
7. Remove the palm rest (see Removing the Palm Rest).

NOTICE: Handle the speakers with care to help prevent damage to them.

8. Disconnect the speaker cable connector from the system board and remove the M2.5 x 5-mm screw from the speaker assembly.

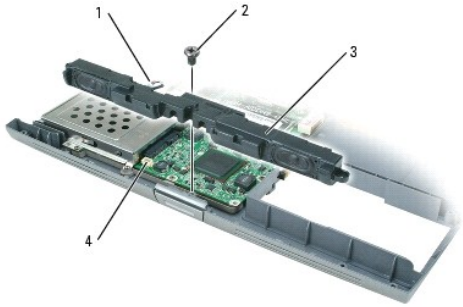

1	M2.5 x 5-mm screw	2	speaker cable connector	3	speaker assembly

9. Remove the speaker assembly.

Replacing the Speaker Assembly

CAUTION: Before you begin the following procedure, follow the safety instructions in the Product Information Guide.

NOTICE: To avoid electrostatic discharge, ground yourself by using a wrist grounding strap or by periodically touching an unpainted metal surface (such as the back panel) on the computer.

NOTICE: To help prevent damage to the system board, remove the main battery (see Before Working Inside Your Computer) before working inside the computer.

1. Align the speaker assembly on the screw holes for securing the assembly to the computer base.

2. Replace the M2.5 x 5-mm screw that secures the speaker assembly in place.

Back to Contents Page

Back to Contents Page

System Board Assembly

Dell™ Latitude™ D520 Service Manual

- Removing the System Board Assembly
- Replacing the System Board Assembly

Removing the System Board Assembly

CAUTION: Before you begin the following procedure, follow the safety instructions in the Product Information Guide.

NOTICE: To avoid electrostatic discharge, ground yourself by using a wrist grounding strap or by periodically touching an unpainted metal surface (such as the back panel) on the computer.

NOTICE: To help prevent damage to the system board, remove the main battery (see Before Working Inside Your Computer) before working inside the computer.

The system board's BIOS chip contains the Service Tag, which is also visible on a barcode label on the bottom of the computer. The replacement kit for the system board includes a CD that provides a utility for transferring the Service Tag to the replacement system board.

1. Follow the instructions in Before You Begin.
2. Remove the hard drive (see Removing the Hard Drive).
3. Remove the media bay device (see Media Bay).
4. Remove the memory module(s) (see Memory).
5. Remove the modem (see Removing the Modem).
6. Remove the Mini-Card (see Mini-Card).
7. Remove the hinge cover (see Hinge Cover).
8. Remove the keyboard (see Removing the Keyboard).
9. Remove the display assembly (see Removing the Display Assembly).
10. Remove the processor thermal-cooling assembly (see Removing the Processor Thermal-Cooling Assembly).
11. Remove the processor (see Removing the Processor Module).
12. Remove the palm rest (see Removing the Palm Rest).

NOTE: It is not required but is highly recommended that you remove the system fan (see System Fan) to allow easier access to the system board.

13. Remove the speaker assembly (see Removing the Speaker Assembly).
14. Remove the two M2.5 x 5-mm screws labeled "B."

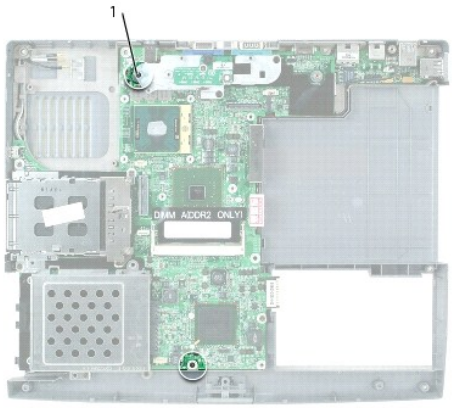

1	M2.5 x 5-mm screws (2)				

15. Turn the computer upside down and remove the four M2 x 3-mm screws labeled "B" that secure the system board to the computer base.

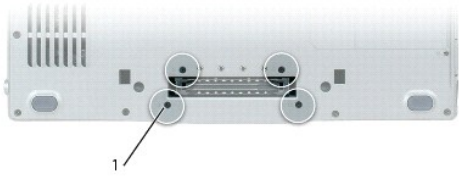

1	M2 x 3-mm screws labeled "B" (4)

16. Remove the system board assembly:

    a. With the back of the computer facing you, grasp the upper-right corner of the system board assembly and lift it slightly; slowly easing the connectors out of their access holes on the back and side of the computer base.

    b. Pull the system board assembly away from you toward the front of the computer to remove the system board assembly.

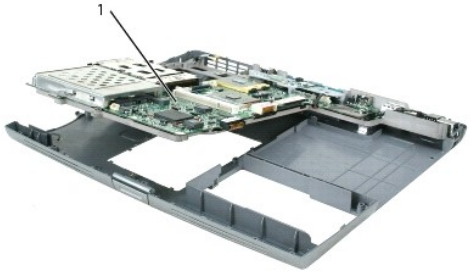

		1	system board assembly		

Replacing the System Board Assembly

1. Perform all of the steps in Removing the System Board Assembly in reverse order.

NOTICE: Before turning on the computer, replace all screws and ensure that no stray screws remain inside the computer. Failure to do so may result in damage to the computer.

2. Turn on the computer.

NOTE: If you use a BIOS update program CD to flash the BIOS, press <F12> before inserting the CD so that you can set up the computer to boot from a CD this one time only. Otherwise, you must enter the system setup program to change the default boot order.

3. Insert the flash BIOS update program CD that accompanied the replacement system board into the optical drive. Follow the instructions that appear on the screen. See Flashing the BIOS for further information.

4. Enter the system setup program to update the BIOS on the new system board with the computer Service Tag.

Back to Contents Page

Back to Contents Page

Dell™ Latitude™ D520 Service Manual

Notes, Notices, and Cautions

NOTE: A NOTE indicates important information that helps you make better use of your computer.

NOTICE: A NOTICE indicates either potential damage to hardware or loss of data and tells you how to avoid the problem.

CAUTION: A CAUTION indicates a potential for property damage, personal injury, or death.

Abbreviations and Acronyms

For a complete list of abbreviations and acronyms, see "Glossary" in the *User's Guide*.

If you purchased a Dell™ n Series computer, any references in this document to Microsoft® Windows® operating systems are not applicable.

Information in this document is subject to change without notice.
© 2006 Dell Inc. All rights reserved.

Reproduction in any manner whatsoever without the written permission of Dell Inc. is strictly forbidden.

Trademarks used in this text: *Dell*, the *DELL* logo, and *Latitude* are trademarks of Dell Inc; *Bluetooth* is a registered trademark owned by Bluetooth SIG, Inc. and is used by Dell under license; *Microsoft* and *Windows* are registered trademarks of Microsoft Corporation.

Other trademarks and trade names may be used in this document to refer to either the entities claiming the marks and names or their products. Dell Inc. disclaims any proprietary interest in trademarks and trade names other than its own.

Model PP17L

March 2006 Rev. A00

Back to Contents Page